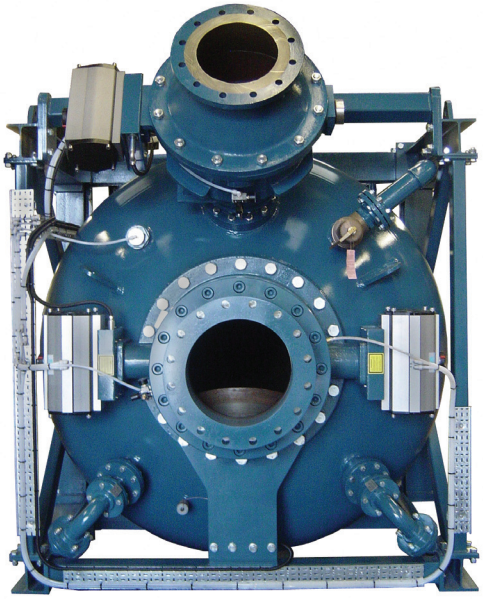

Cement & Building Materials Conveying

Pneumatic Dense-Phase Cement & Building Materials Conveying Systems

Macawber

- No constantly moving parts. Very low maintenance
- Power cost reduced by almost 50%. No motors, drives or screws required
- Reduced pipe wear and conveying velocity
- Silo dust filters reduced in size. Cyclones eliminated
- Suitable for cement, dry mortar mix, fly ash, gypsum and other building products
- Based on technology widely used throughout the world since 1977

The Macawber Group

Since 1977 the Macawber Group has been developing **dense-phase pneumatic conveying systems** for demanding materials handling requirements in various process industries. This has resulted in significant improvements in conveying methods with reduced operating costs and improved equipment reliability. The applications targeted have been for abrasive materials, high temperature materials, with high tonnage transfer and long distance conveying, providing considerable benefits for the iron and steel, coal fired utilities, and minerals handling and mining industries.

This experience and proven technology is focused on the cement industry to bring the same benefits and to provide an effective alternative to outdated conveying methods.

Dense-phase pneumatic conveying relies on transferring materials at much lower velocities than normally experienced with screw pump conveying technology. The reason is that the Macawber conveying process does not depend on complete fluidisation of the cement and complete mixing of the cement with the conveying air. Instead the cement is transferred largely as a mass without depending on air mixing. This achieves a much higher pipeline loading and much lower cement conveying velocity.

The above is achieved with a simple pressure vessel that, unlike screws, does not contain any moving parts such as drives, motors, bearings or screws that are continuously worn from the high-speed movement of the product. The savings in power consumption and maintenance created by conveying in low velocity are significant and should be carefully considered.

T/150/12 Macpump

The Technology

The objective is to achieve low material velocity along the pipeline and to use less energy in doing so, as well as reduce wear and maintenance.

Carefully managed line loading to fill the pipeline with cement without relying on fluidization to move the material as a mass along the pipe at a lower transfer velocity impacts power cost and equipment wear.

The variation in conveying techniques are very important. **Dense-Phase conveying is the present state of the art for moving abrasive materials.**

Consider the differences:

Dilute-Phase conveying
Average material velocity >100 ft/second
Dilute phase conveying method relies on suspension of the cement in an air stream. This means mixing the cement powder with the conveying air so that it is completely homogenous. Although this sounds simple it requires much more energy to provide the high volumes of conveying air to do this.

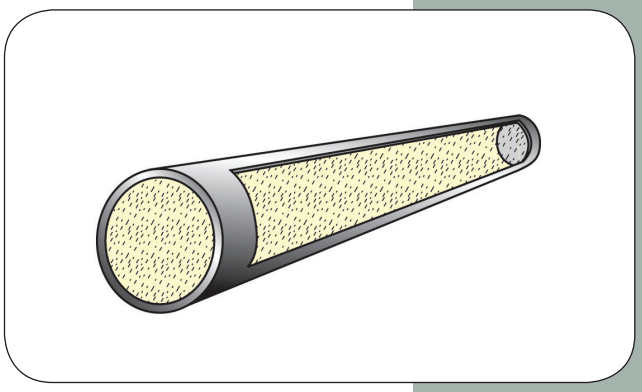

Clearly the efficiency is low because the pipeline is transferring mostly air and not cement.

- High energy cost
- High maintenance cost
- High overall cost

Dense-Phase. Moving Bed conveying
Average material velocity 10-30 ft/second
The velocity in a moving bed-conveying regime is in the range of 3-10m/sec. Macawber systems generally convey at the lower end of this range. Apart from saving energy, the moving bed method greatly reduces pipe wear. Generally, ordinary schedule 40 carbon steel pipe and wear resistant (e.g. basalt lined) bends can be used.

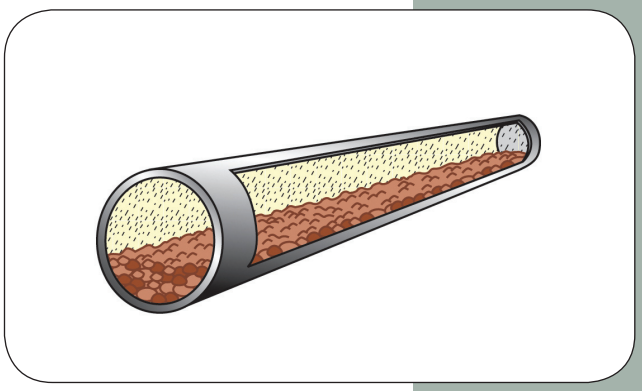

- **Savings in energy cost**
- **Savings in maintenance cost**
- **Overall cost savings**

Dense-Phase. Slug Flow Conveying
Average material velocity 3-10 ft/second
The material velocity ranges between 1-3m/second with another drop in energy consumption and even longer pipeline life. Typical pipe specs – schedule 40 carbon steel.

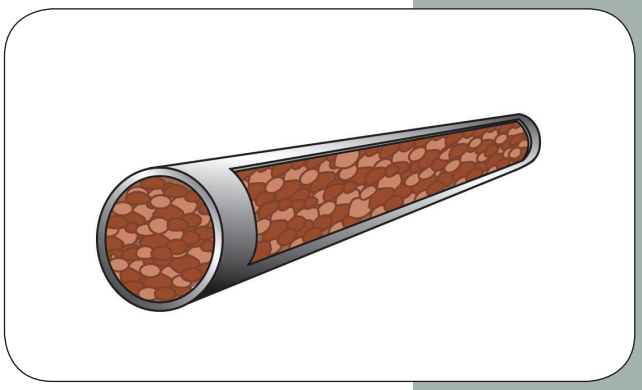

- **Maximum energy savings**
- **Lowest maintenance cost**
- **Lowest overall cost**

New Technology Achieves Lower Operating Cost

Macawber Engineering has developed a well-proven group of technologies for handling cement and other building products with the objective of achieving the lowest possible operating cost. Operating costs can be classified into two main groups: energy cost and maintenance costs.

Energy costs

Macawber systems are low in energy consumption. Firstly, the large motor that is familiar to users of long distance screw pump systems is totally eliminated in the Macawber systems.
Secondly, in shorter distance systems of 1000 ft and below, Macawber's Cementveyor system has reduced the conveying air consumption (and hence energy consumption) to a minimum by optimizing the material-to-air ratio. The combination of these factors has led in some cases to a halving of previously accepted energy costs.

Maintenance costs

The elimination of the screw pump motor has led to significant savings in maintenance; in fact, all continuously rotating parts have been completely eliminated in Macawber systems. This has resulted in the reduction of part replacement and the labor cost associated with high maintenance systems such as screw pumps.

The Old and the New. Comparisons of Features

Feature	Screw Pump	Macawber Technology
Transfer Rates to 400 tons/hour	YES	YES
Distances to 5000 ft (1600 M)	YES	YES
Requires High Speed Rotating Parts	YES	NO
Requires Large Pump Motor	YES	NO
Energy Consumption/ton	HIGH	LOW
Maintenance Cost	HIGH	LOW
Overall Operating Cost	HIGH	LOW

The Old and the New. Comparison of Performance

Application Example 50 tons/hour and 200 ft (65 M)	Screw Pump	Rotary Valve	Macawber Technology
Average Material Velocity M/sec. (ft/min)	13.5 (2592)	20.0 (3840)	7.5 (1440)
Material to Air Ratio	8.5	7.5	10.5
Energy Consumption Kwatt per ton Transferred	2.4	3.8	1.5
Pipe Preservation Guarantee	NO	NO	YES
Uses Heavy Duty Pipe	YES	YES	NO
Dust Filter Size	LARGE	LARGE	SMALL

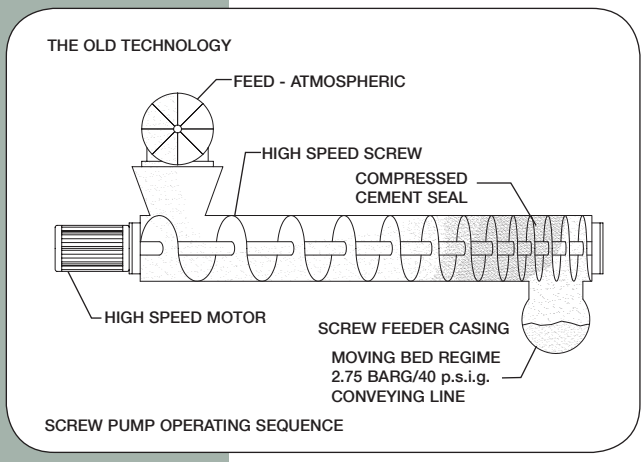

The Screw Pump

The screw pump was introduced for cement handling about 75 years ago. Cement is continuously fed into a high speed screw. The screw is designed so that a pressure boundary is formed between the inlet and discharge of the pump. As the cement is discharged into the pipeline it is fluidized for conveying. The pump screw is powered by a large motor. The energy required for the motor is additional to the energy required to produce the conveying air. There is considerable wear to the screw itself due to the high rotational speed and also to the screw support bearings and the screw chamber.

The New Technology
A System Type to Meet Every Handling Requirement

Macawber's group of technologies can provide a system to address any application requirement. For short or long conveying distances the **Variflo** and the **Macpump** are capable of conveying cement at high tonnage rates with low operating costs. The **Cementveyor** system has been designed for conveying moderate tonnage rates at distances below 1000 ft and provides very efficient use of conveying air.

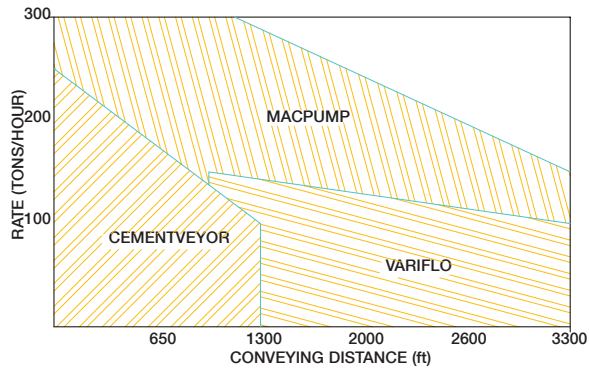

The Cementveyor

The Cementveyor is a single vessel, dense phase transporter. The system is designed to produce high material-to-air-ratios and low conveying velocities for cement conveying. The **Cementveyor** comprises a small pressure vessel fitted with the unique Macawber **Dome Valve®** for vessel filling. The **Dome Valve®** is the only moving part in the system and moves through 90° to a fully open unrestricted filling position. When closed, the valve is pneumatically sealed. The **Cementveyor** continuously cycles as often as necessary to meet the specified conveying rate. A pressure sensor determines when the cycle is complete and the air supply is turned off. The conveyor is then ready for re-filling and a new conveying cycle proceeds.

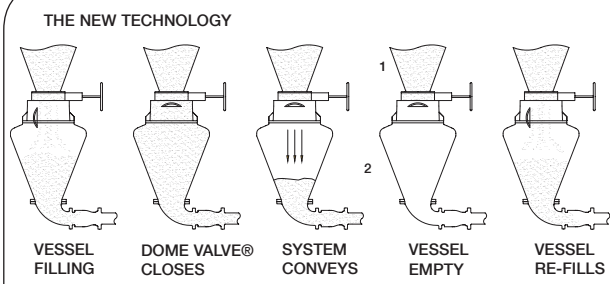

1. THE INCREDIBLE DOME VALVE® CLOSES THROUGH THE COLUMN AND SEALS ON CEMENT.
2. SIMPLE PRESSURE LEVEL.

CEMENTVEYOR OPERATING SEQUENCE

Variflo

The Variflo is a single vessel, dense-phase transporter. The system is designed to refill at the same time as cement is being conveyed through the pipeline. Cement conveying is close to continuous and the total loading in the line is controlled by a modulating **Dome Valve®** on the discharge of the machine. The modulating valve controls the flow of cement into the conveying line in response to conveying pressure. This method allows conveying distances of 1000 ft and greater. The Variflo is suitable for conveying cement, fly ash, lime, limestone and other powders and fine granules.

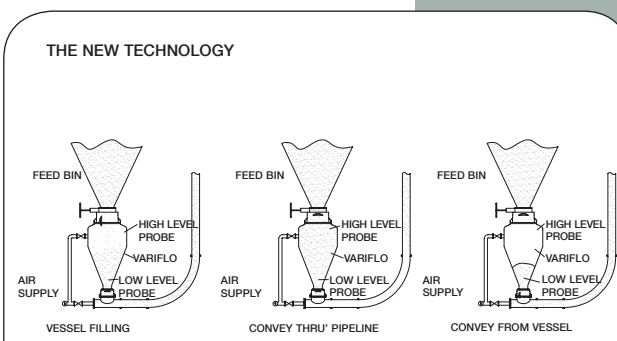

VARIFLO OPERATING SEQUENCE

Macpump

The Macpump is a twin vessel system designed to provide high conveying rates up to 300 T/H and distances of 1000 ft and higher. The principle of operation is simple and involves only two moving parts per vessel (the inlet and outlet **Dome Valve®**). As the first vessel is filling with cement, the second vessel is discharging into the conveying line. This provides for completely continuous conveying with discharge into the line via a modulating valve as for the **Variflo**. When the second vessel has been discharged, it is vented back to atmospheric pressure and refilled. Meanwhile, the first vessel commences discharge into the conveying line. This is a continuous process, optimizing the conveying rate and material-to-air-ratio. The **Macpump** is suitable for conveying cement, fly ash, lime, limestone and other powders and fine granules.

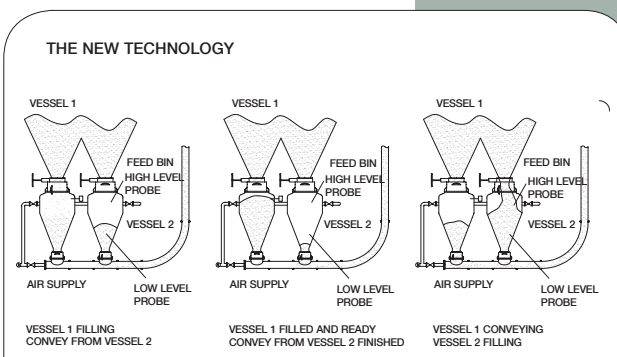

MACPUMP OPERATING SEQUENCE

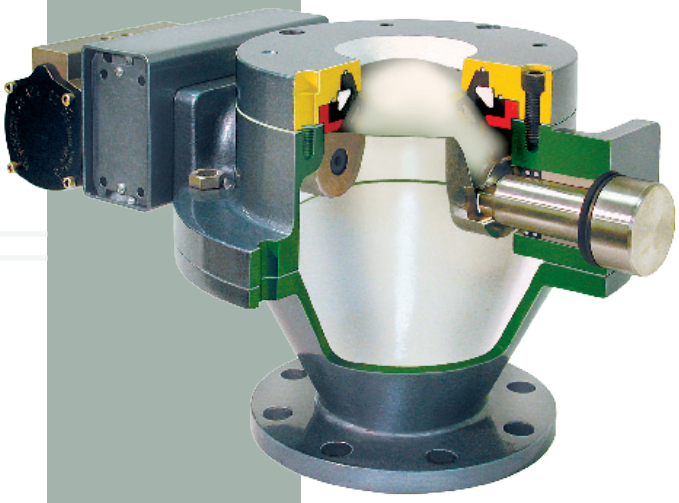

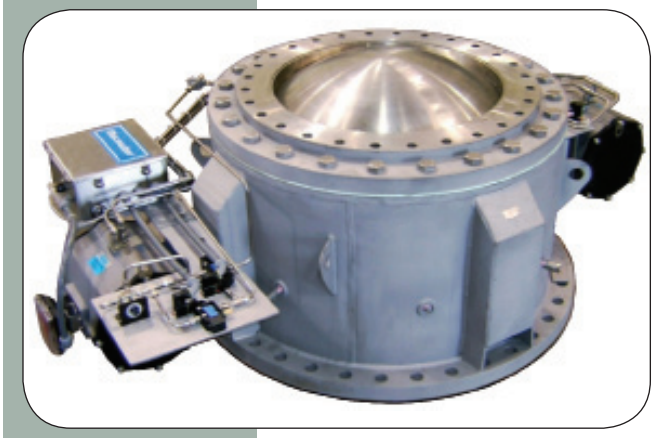

The Dome Valve®

1. **The Dome Valve®** was introduced and patented in 1978 for the sole purpose of providing long life and reliability when handling hot and abrasive materials. The unique inflatable seal traps abrasive particles on closing, preventing their movement under the effect of the pressure differential. This action ensures wear resistance from particles, operating reliability and valve performance.

2. Continuous development over the years with additional patents and innovations has developed the market for the valve to many applications. In addition, the **Dome Valve®** is widely used to retrofit ash valves requiring high maintenance and frequent replacement.

3. The operating sequence of the **Dome Valve®** is very simple and effective. The spherical component rotates 90º to pass through a static or moving column of abrasive ash to the closed position where an inflatable seal is pressuriz.ed to entrap particles and prevent their movement. The inflatable seal reliably achieves a pressure differential of 100 psi at a high temperature.

4. The standard size range is 2 inches to 16 inches, withstanding temperatures up to 660ºF, with inline configuration for pipeline service or bulkhead configuration for pressure vessel inlet. Special **Dome Valves®** are available to 30 inches and 625 psi pressure rating with various materials of construction.

Dome Valve® Closure and Seal comparison with other valve types

Function:	Knife Gate Valve	Butterfly Valve	Ball Valve	Dome Valve®
Closing member away from material flow	YES	NO	YES	YES
Close without jamming on column of material	NO	NO	NO	YES
Close and seal on column of material	NO	NO	NO	YES

Dome® Valve Pressure Comparison with other valve types

Seal Bubble Tight to:	Knife Gate Valve	Butterfly Valve	Ball Valve	Dome Valve®
14.5 psi (1 barg)	NO	NO	Maybe	YES
100 psi (7 barg)	NO	NO	NO	YES
623.5 psi (43 barg)	NO	NO	NO	YES
Combined Pressure and Vacuum	NO	NO	Maybe	YES

Application Examples

1. Blue Circle, NSW, Australia
Model T/150/12 Macpump – Cement
Model 8/8-4 Cementveyors – Cement
125 T/H x 435 ft

2. Green Island Cement, Hong Kong
Model 120/16-240/10 Macpump – Cement
100 T/H x 1310 ft

3. Mitsubishi Heavy Industries, Japan
Model 50/12-10 Denseveyor – Fly Ash
30 T/H – 740 ft

4. Omya UK
Model 12/12 Denseveyor – Gypsum
22 T/H x 460 ft

5. Fiddlers Ferry Power Station, UK
Model 3428/16-12 Denseveyor – Fly Ash
120 T/H – 560 ft

6. W.R. Grace Corp., Lexington, MA, USA
Model 8/8-5 Denseveyors – Gypsum
10 T/H x 200 ft

7. Cockburn Cement, WA, Australia
Model 20/12-8 Cementveyor – Cement
30 T/H x 330 ft

8. Ready-Mix Company, Trebol, Chile
Model 12/12-6 Cementveyors – Cement
25 T/H x 295 ft

9. Kaiser Cement, San Antonio, TX, USA
Model 20/12-8 Cementveyor – Cement
25 T/H x 495 ft

10. Clow Water Systems, Coshocton, OH, USA
Model 2/4-2 Cementveyor – Cement
5 T/H x 165 ft

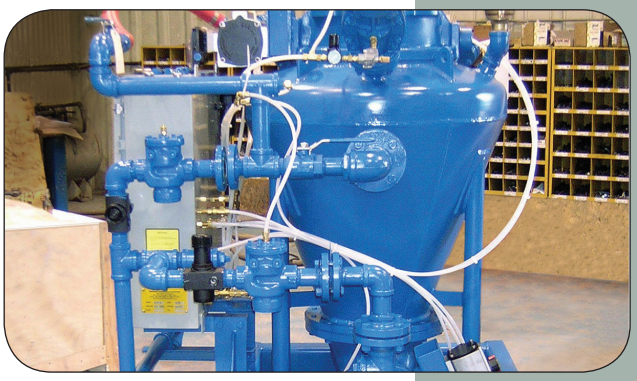

Macawber China
901 Room, No. 145 Pu Jian
Shanghai 200127
P. R. CHINA
Tel : +86 (0) 21-68751377
Fax: +86 (0) 21-58312152
macawber@macawber.com.cn

Mactenn Systems Limited
Unit 6, Bull Lane Industrial Estate
Acton, Suffolk CO10 0BD
UK
Tel: +44 (0)1787 882 422
Fax: +44 (0)1787 882 433
sales@mactenn.com

Macawber Engineering Systems India Private Ltd.
131 Hindustan Kohinoor Complex,
L.B.S. Marg, Vikhroli (West)
Mumbai – 400 083
Maharashtra, India
Tel : +91 22 6796 9655
Fax: +91 22 2579 4624
sales@macawberindia.net

Macawber Engineering, Inc
1829 Clydesdale Street
Maryville, Tennessee 37801
USA
Tel: +1 865 984 5286
Fax: +1 865 977 4131
sales@macawber.com

Macawber

Macawber Engineering, Inc.
1829 Clydesdale Street
Maryville, TN 37801 USA
Tel : 865-984-5286 Fax: 865-977-4131
sales@macawber.com
A Macawber Group Company

ISO 9001
Company Management
Quality Certification
(parent company)

ADVANCED PNEUMATIC CONVEYING SYSTEMS
CONTROLLED RATE INJECTION SYSTEMS
INFLATABLE SEAT VALVES

Pressure Vessel
Quality Assurance Certification

Your Local Distributor: